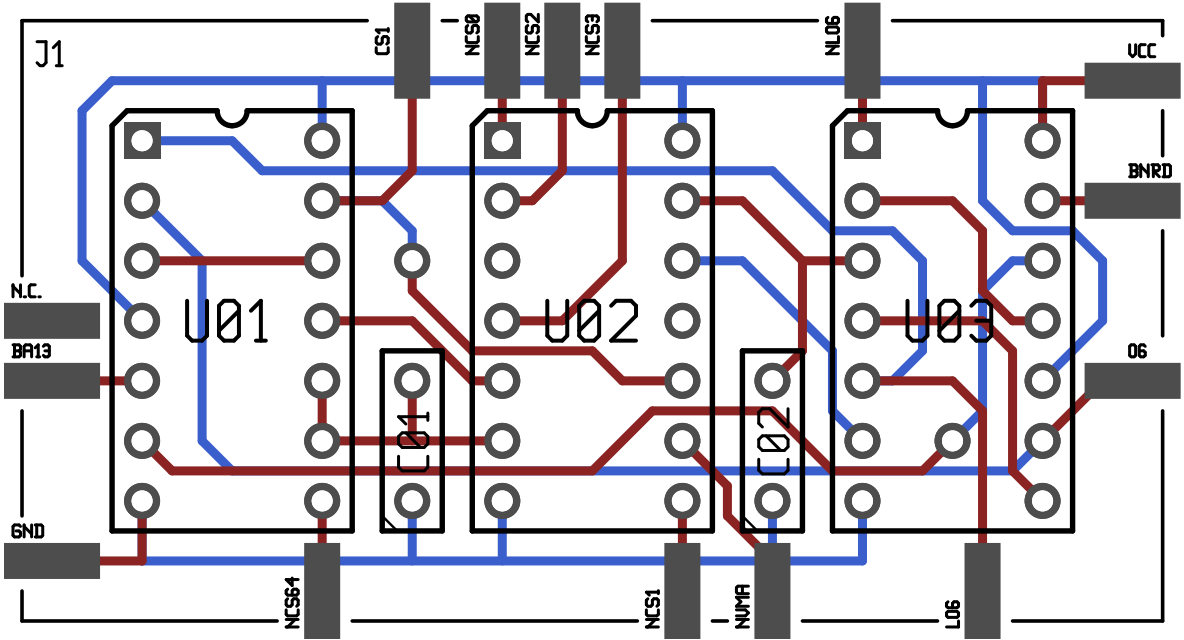
J1
CS1
NCS0
NCS2
NCS3
NL06
VCC
BNRD
N.C.
BA13
U01
U02
U03
C01
C02
O6
GND
NCS64
NCS1
NUMA
L06

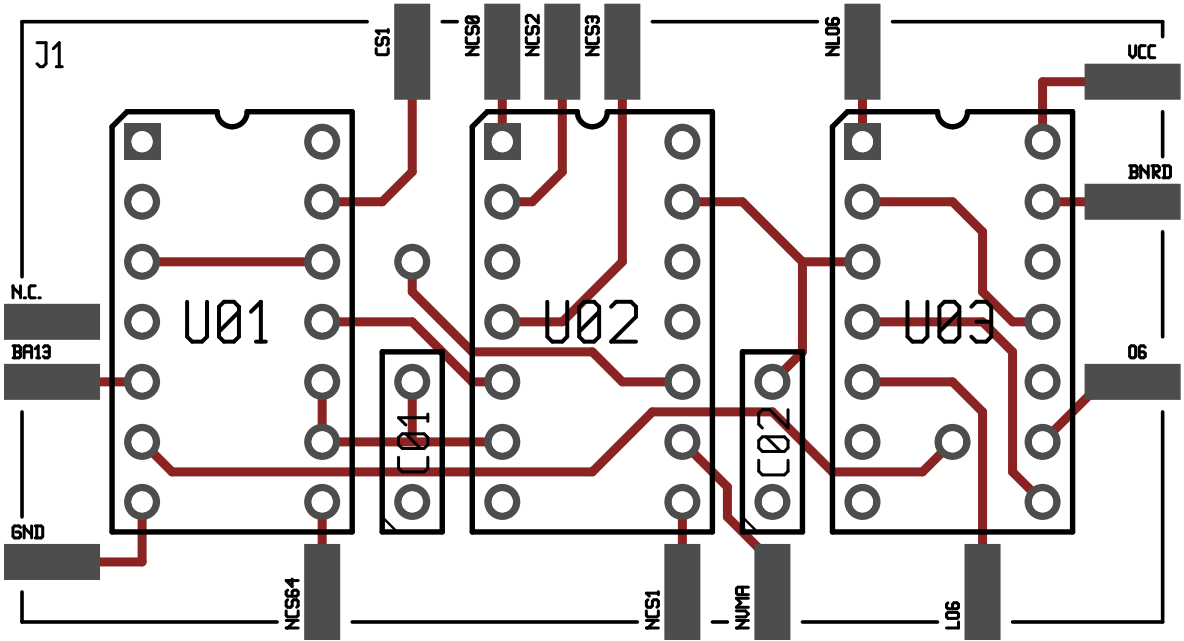
J1
CS1
NCS0
NCS2
NCS3
NL06
VCC
BNRD
N.C.
BA13
GND
U01
U02
U03
C01
C02
O6
NCS64
NCS1
NUMA
L06

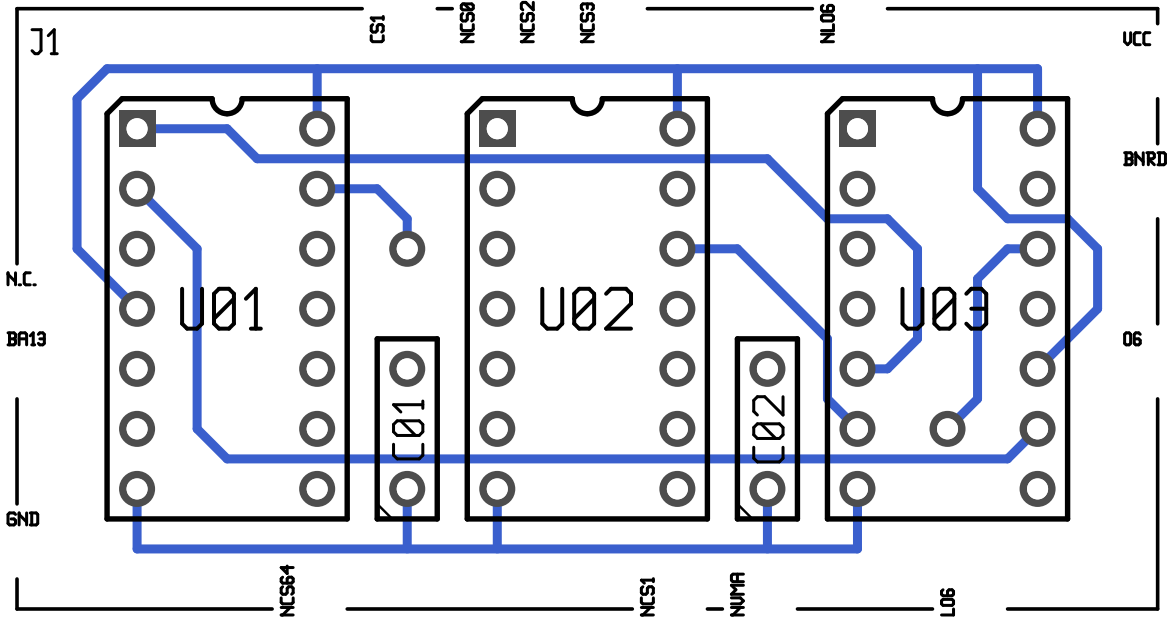
J1
CS1
NCS0
NCS2
NCS3
NL06
VCC
BNRD
N.C.
BA13
GND
U01
U02
U03
C01
C02
O6
NCS64
NCS1
NUMA
L06